支托臂和控制面板系统

Support arm and control panel system

一个系统
one system

一个工程解决方案
One engineering solution

一个设计
one design

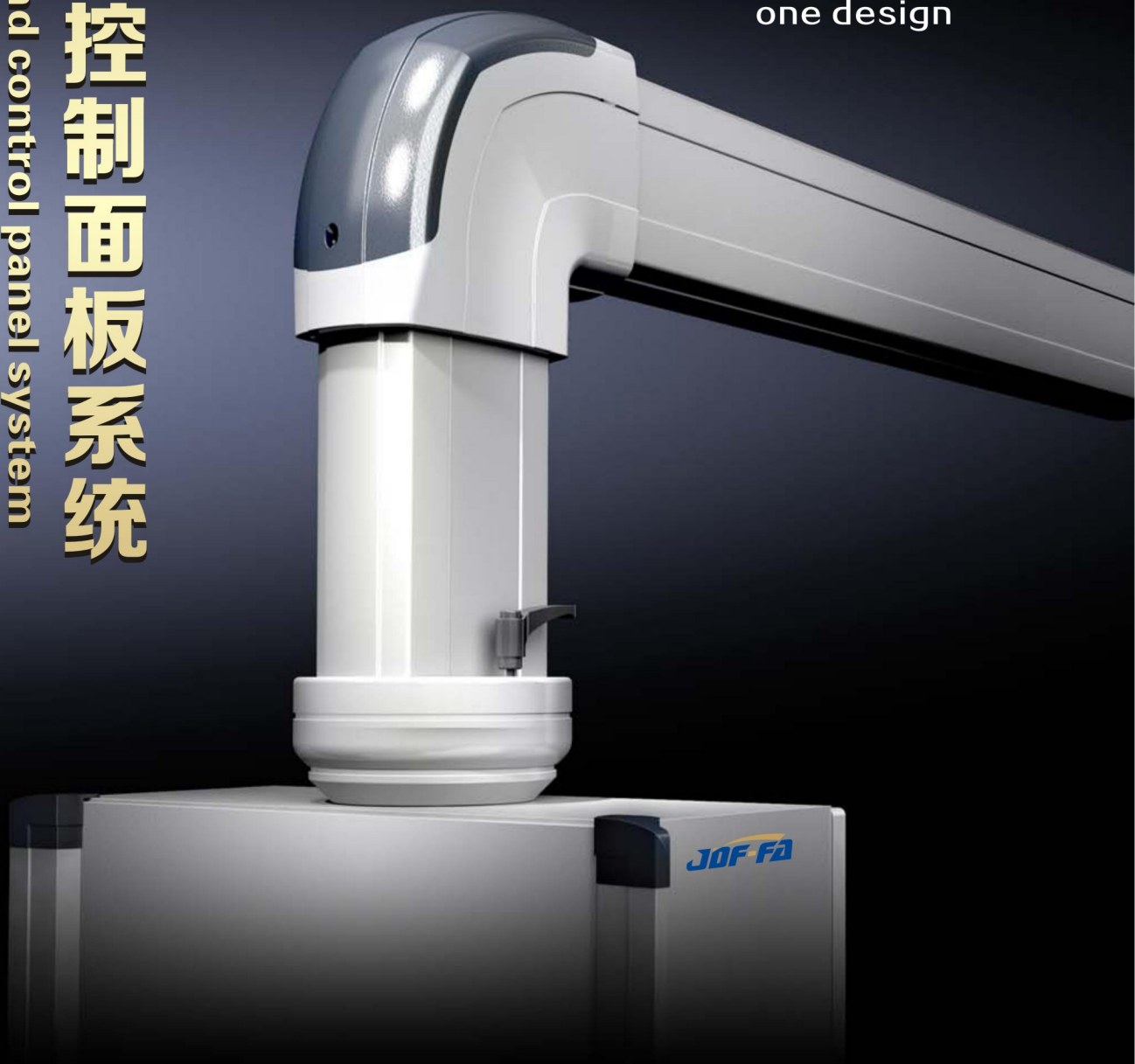

惠州市金鼎丰自动化科技有限公司

Huizhou Jindingfeng automation Technology Co., LTD

www.jdf-fa.com

无论在机器的哪个角度，无论操作人员高矮，坐下还是站立操作 -通过支托臂系列均可实现观察与操作的完美互动。
From different lines of sight to the machine to smaller or taller operators working from a seated or standing position – with the support arm systems, the interaction between observing and controlling has never been better

优点:

■ 系统 - 三个可组合式截面
One system – three combinable cross-sections

■ 具有优越性能的美观设计
Elegant design full of functionality

■ 稳定性强，适用于 1500 N 以下的所有负荷等级■ 通用组合方式
Highly stable for all load levels up to 1800 N

■ 连续的自动电位平衡
Consistent combination options

■ 垂直方向简单的系统更换 减少费用和重量
Continuous, automatic potential equalisation

■ 简单统一的调整原理
Simple and uniform adjustment principle

■ 通过集成式电缆 / 边沿护条进行更安全的电缆管理
Safe cable management with integrated cable/edge protection

■ 几乎所有使用领域都可找到相应组件■ 集成式可调节的转动角度限制器 Integrated, adjustable range of rotation limits

■ 开放式支承型材方便扩展和维修作业■ 单人装配简便
Open support section for easy upgrade and servicing access Easy one-person assembly

■ 支托臂切割简单
Support arm sections can be easily cut to the required length

■ 无需螺纹即可通过自攻螺钉进行固定
Mounting without thread-tapping due to self-tapping screws

支托臂系统
50-65/60-95/75-110

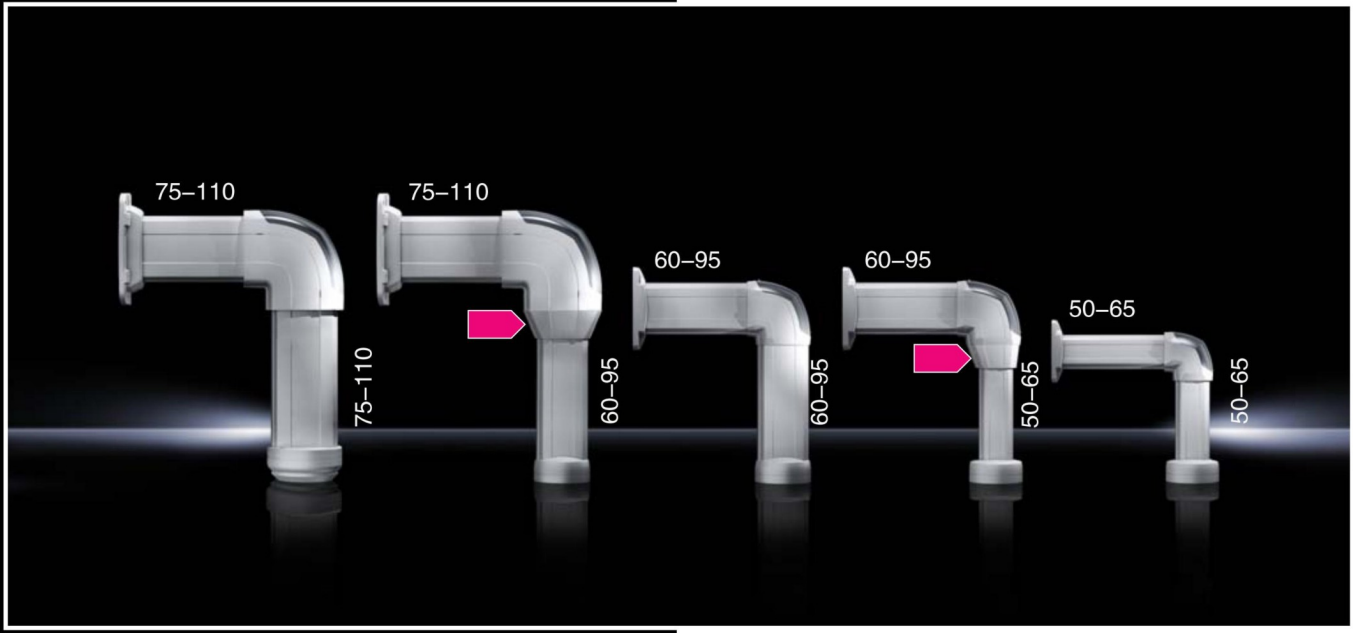

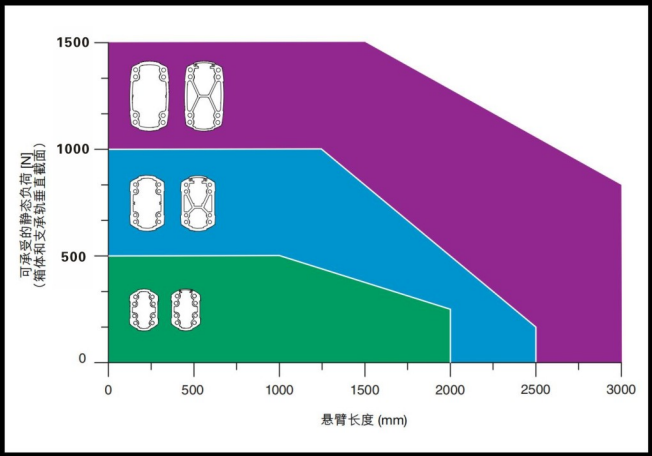

系统更换System change

在垂直轴上可以随时将系统更换至下一个更小的系统而不影响支承负荷。In the vertical axis, a system change to the next smallest
system is possible without impairing the load capacity.

一种系统 – 一种制造 – 一种设计

One system - one engineering solution - one design

- 统一调整 Uniform adjustment method
- 通过有效的电缆管理和持续的自动电位平衡提高安全性 Greater safety due to efficient cable management and continuous automatic potential equalisation
- 最大负荷为 1800N (180kg) Load range up to 1800 N (180 kg)
- 稳定性强 High level of stability

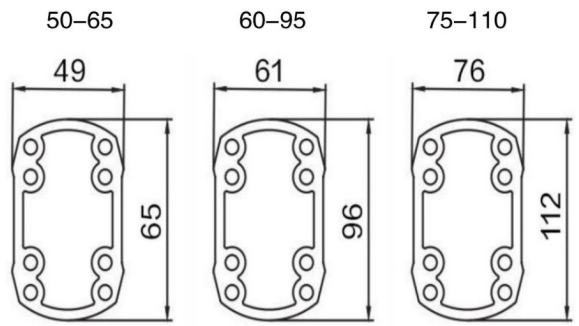

支托臂系统 JDF50–65/60–95/75–110 承载力

支托臂系统 JDF 50-65
允许负荷取决于系统安装

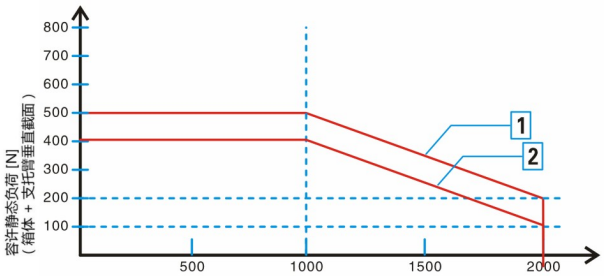

墙壁 / 底板固定件，不要与中间连接节一起使用！
中间连接节每个系统只能应用一次！

1 系统安装，无中间连接节，

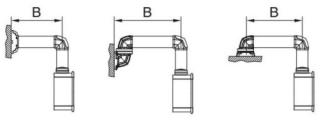

B 最大 = 2000 mm

2 系统安装，带中间连接节

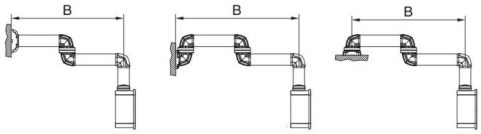

B 最大 = 2000 mm

支托臂系统 JDF 60-95
允许负荷取决于系统安装

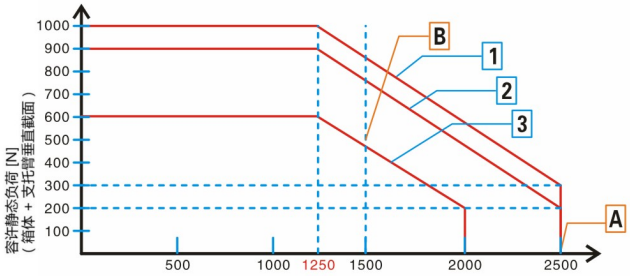

1 带封闭式或敞开式支承型材

2 带封闭式支承型材

3 带敞开式支承型材

A 启动
带有水平出线口的系统时其最大长度为 2500 mm。

1 系统安装，无中间连接节，

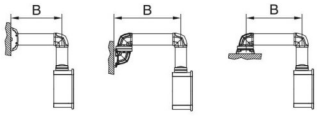

2 3 系统安装，带中间连接节

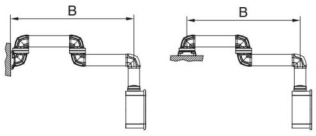

B 最大 = 2500 mm

中间连接节每个系统
只能应用一次！

B 启动
带有垂直出线口的系统时 其最大长度为 1500 mm。

1 系统安装，无中间连接节，

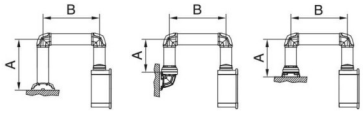

2 3 系统安装，带中间连接节

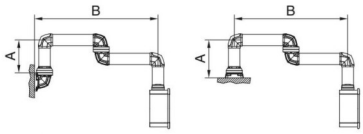

A 最大 = 500 mm　B 最大 = 1500 mm

中间连接节每个系统
只能应用一次！

支托臂系统 JDF 75–110
允许负荷取决于系统安装

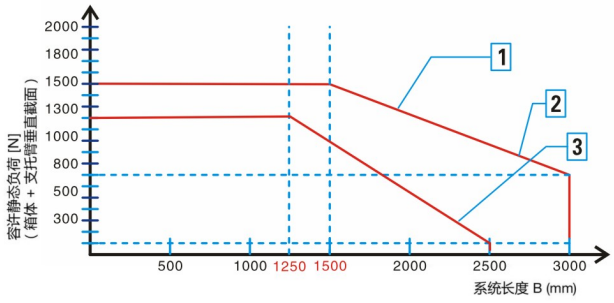

1 带封闭式或敞开式支承型材

2 带封闭式支承型材

3 带敞开式支承型材

1 系统安装，无中间连接节

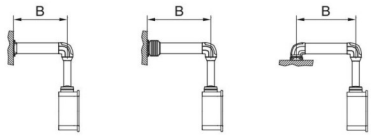

B 最大 = 2300 mm

2 3 系统安装，带中间连接节

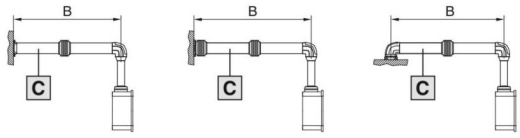

B 最大 = 3000 mm

中间连接节每个系统只能应用一次！

C 支承轨截面尽可能采用封闭式支承型材。

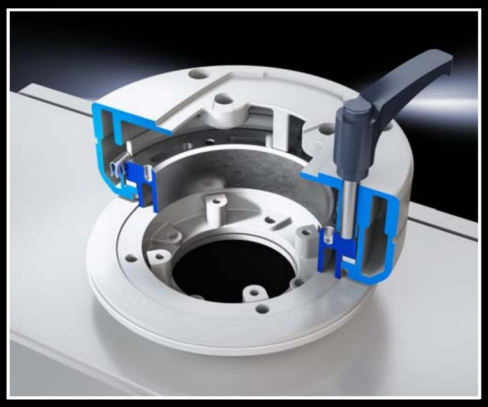

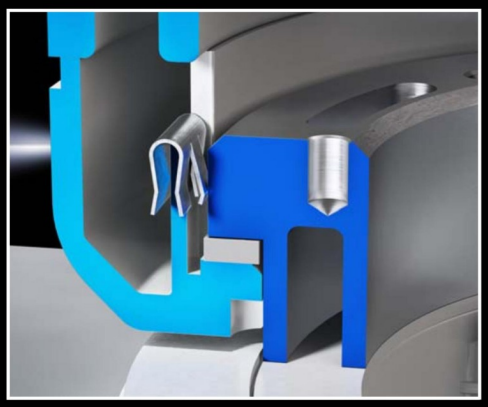

电位平衡

- 所有支托臂组件均具有自动连续的电位平衡可避免在电缆断裂时对操作员产生危险
- CP 系统的旋转组件具有滑动触点，可确保对整个系统都能进行有效的电子触控
- 通过圆滑的边角及专用电缆保护组件对电缆进行持续保护，以防止其折断或破损

Potential equalisation

- Automatic and continuous potential equalisation of every support arm component protects the operator if a cable should break
- The rotating elements of the CP system are fitted with sliding contacts to ensure a reliable electrical contact along the entire system
- Continuous cable protection through rounded edges and special cable protection elements prevent cables from being kinked or chafed

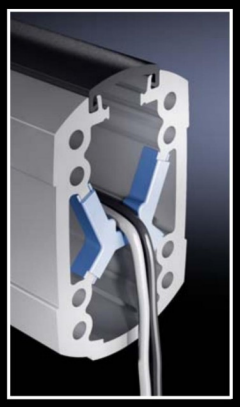

边沿护条

- 长效的电缆保护组件可使电缆在长时间工作时不受到损坏
- 敞开式支托臂所使用的插入式电缆保护元件可使其外形轮廓更加流畅
- 可旋转元件中用螺钉进行固定的电缆保护组件可防止电缆破损折断

Edge protection

- Continuous cable protection elements protect cables from damage when under constant load
- Snap-on cable protection elements for open support arm sections to round off the profile contours
- Cable protection elements in the rotating components are fitted with mounting screws and prevent cables from being kinked or chafed

高效的电缆管理

- 开放式支承型材方便扩展和维修作业
- 简易通用的电缆导入及穿通方法
- 可使用塞绳接头
- 该截面可使用大插头
- 为区分数据及电源线作准备
- 可拆卸式塑料盖 , 便于电缆穿通

Efficient cable management

- Open support section for easy upgrade and servicing access
- Simple and continuous cable entry and feed-through options
- Strain-relief option
- Cross-section sufficient for large connectors
- Prepared for the separation of data and power cables
- Removable plastic cover for user-friendly cable feed-through

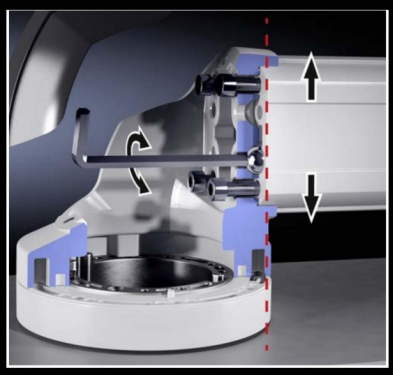

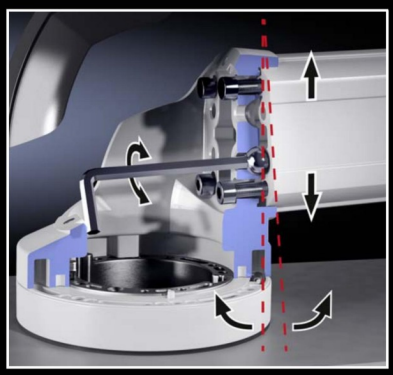

调整

- 调整简便，无需拆卸系统，三步即可完成
- 1. 在支托臂侧面安装校准螺钉
  2. 用螺钉将各部分组件连接到一起 (由一人通过锁眼钻孔进行操作)
  3. 通过步骤 1 中安装的校准螺钉对支托臂侧面进行校准
- 为适配器信号柱准备好塑料盖子
- 可对墙壁侧装进行调整

Adjustment

- Easily adjusted in three steps without dismantling the system
- 1. Apply the adjusting screw to the support arm section
  2. Assemble the individual components using the mounting screws (one-person assembly possible via machined keyholes)
  3. Adjust the support arm section using the adjusting screw fitted in step 1
- Plastic cover prepared for signal pillar adaptor
- Adjustment on wall possible

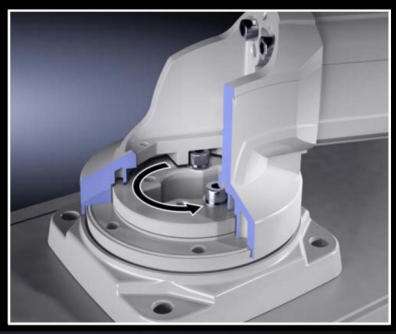

角度限位器

- 系统安装完成后无需拆卸组件即可对转动角度进行限制
  1. 拆除塑料盖
  2. 在必要位置使用限位螺钉 / 螺纹销钉 （进行连接时）
  3. 可通过相应的多孔圆盘对转动角度进行多级调节
  4. 安装塑料盖

Rotation range restrictor

- Perfect limitation of the range of rotation, even retrospectively on installed systems and with no disassembly necessary:
  1. Remove the plastic cover
  2. Fit the check screws/grub screws (on couplings) in the relevant position
  3. Range of rotation can be finely adjusted using the respective holes
  4. Fit the plastic cover

100-150-200系列控制箱由高品质阳极氧化铝型材和铝压铸角部件拼接而成，简洁外观设计，结构稳固，表面阳极氧化后的铝型材更易于清洁，始终保持箱体光亮如新。
控制箱广泛应用于数控机床，装配线及专用设备上各类人机界面和附件的安装，配合悬臂或支撑系统，完全能符合实际操作的要求，箱体尺寸完全按照需求定制。

100-150-200 series control box is made of high quality anodized aluminum profile and aluminum die-cast corner parts, simple appearance design, stable structure, the surface of the anodized aluminum profile is easier to clean, always keep the box bright as new The control box is widely used in CNC machine tools, assembly lines and special equipmentReady for all kinds of man-machine interface and accessories installation, with cantilever orSupport system, can fully meet the requirements of actual operation, boxDimensions are fully customized to your needs.

结构图

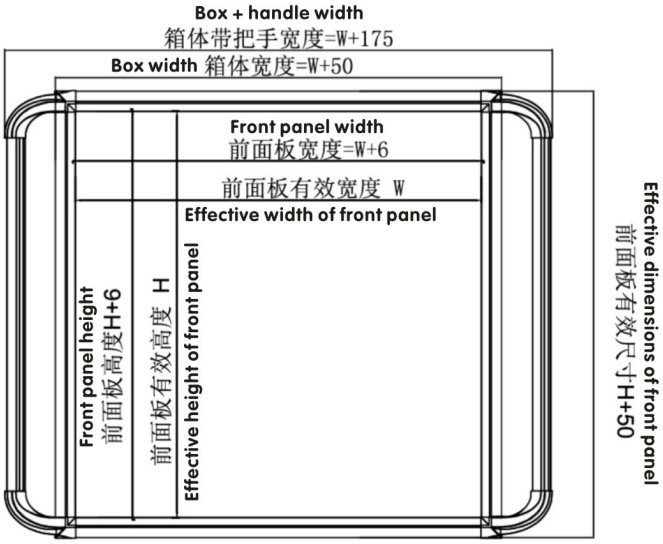

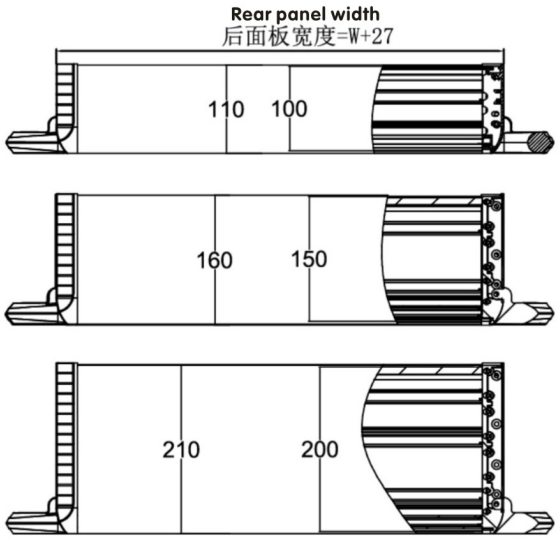

举例：
Example:

200-XXX-XXX

- Front panel height 前面板高度（MM）
- Front panel width 前面板宽度（MM）
- Effective mounting depth of case 箱子有效安装深度（100-150-200 mm）

举例：如选用150mm有效深度箱体400mm宽300mm高及型号为150-400-300，以此类推。

If the size of 150mm effective depth, effective width W400, effective height H300 is selected, the box model is 150-400-300, and so on

基本性能及参数：
有效安装深度：70/130/180/230/280/330/380/430mm
定制最大尺寸：前面板宽度700mm 前面板高度800mm
箱体防护等级：后开门：IP54
螺钉固定后面板：IP65
箱体选用材质：铝型材和把手：铝合金6063
角部件：压铸铝合金102
箱体标配颜色：铝型材和把手管：阳极氧化铝本色
角部件：RAL9012色，后门(后面板)阳极氧化铝
把手固定件：压铸铝合金RAL9012色

Basic performance and parameters:
Effective installation depth:
70-130-180-230-280-330-380-430mm
Custom maximum size:
Front panel width 700mm
The front panel height is 800mm
Enclosure protection class: Rear door: IP54
Screws for rear panel: IP65
Box selection material:
aluminum profile and handle: aluminum 6063
Corner parts: die-cast aluminum 102
Box Standard color: Aluminum profile and handle tube:
anodized aluminum Color
Corner component: Color RAL9012
Rear door (rear panel) anodized aluminum
Handle fasteners: die cast aluminum RAL9012 color

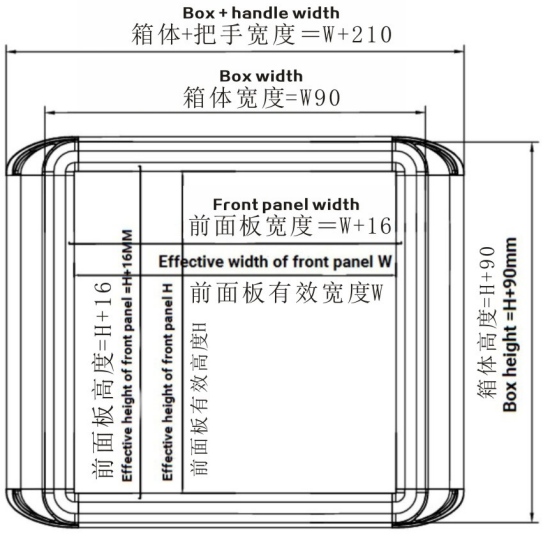

举例
Example

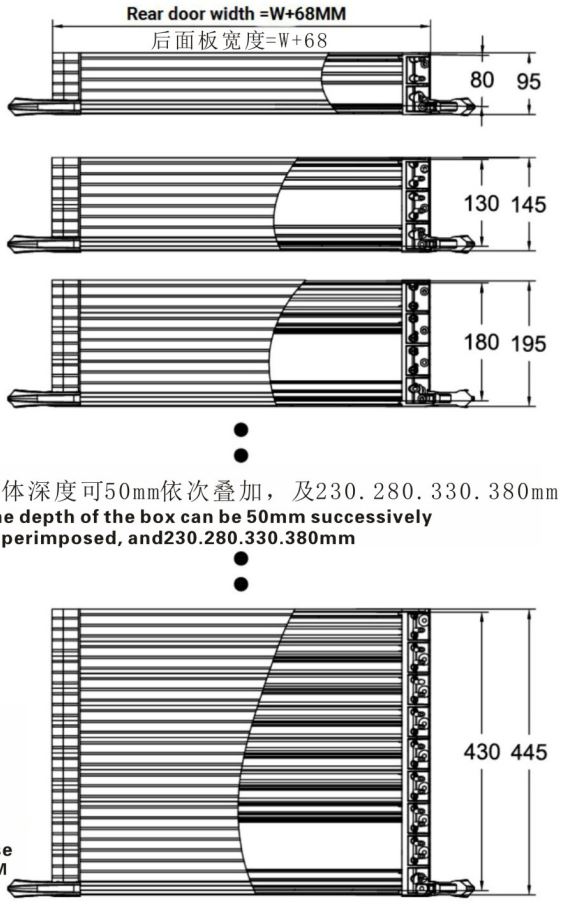

箱体深度可50mm依次叠加，及230.280.330.380mm
The depth of the box can be 50mm successively superimposed, and230.280.330.380mm

80mm有效深度控制箱
80mm effective width control box

型号 **Model number**: 80 - XXX - XXX

前面板高度
Front panel height

前面板宽度
Front panel width

箱子有效安装深度
Effective mounting depth of case
80/130/180/230/280/330/380/430MM

50-65 连接管
50-65 Pipe

连接管主要用于各部件的链接，宽大的内空空间可以放置电缆和控制线材，具有密封性和高承载力。
The connecting pipe is mainly used for the link of various parts, and the wide inner space can be used to place cables and control wires, with sealing and high bearing capacity.

重量 Weight	2.2KG/1000MM
材料 Material	压铸铝合金 Die-cast Aluminum Alloy

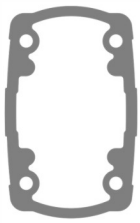

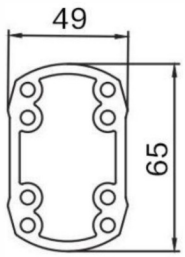

50-65-210 90° 转角
90° Angle

90° 转角联轴器是一种将水平型材与垂直型材相结合的转角模块，具有固定结构。
90° Angle Coupling is a corner turn module which combines horizontal profiles with vertical profiles and has a fixed structure.

重量 Weight	0.4KG
材料 Material	压铸铝合金 Die-cast Aluminum Alloy

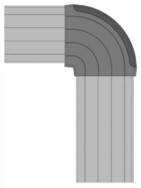

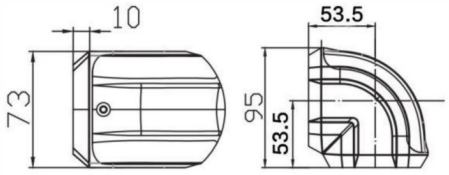

50-65-220 顶座
Top seat

顶座设计用于高连接点(机器顶部等)，该模块允许支撑臂水平放置，可以从左到右旋转320° 。
Top seat Designed for high connection points (top of the machine, etc.), the module allows the support arm to be placed horizontally and can be rotated 320° from left to right。

重量 Weight	0.9KG
材料 Material	压铸铝合金 Die-cast Aluminum Alloy
角度 Angle	旋转320° Rotated 320°

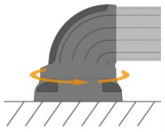

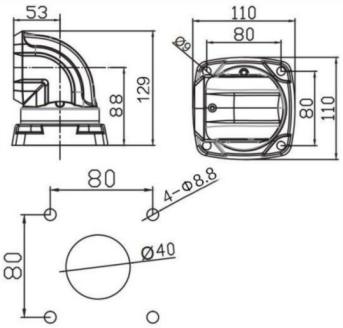

50-65-230 中间铰链
Intermediate hinge

中间铰链，互连结构允许以半独立的角度(320°)从一个移动到另一个使用位于水平轴上的两个操作臂的交点。
Intermediate hinge, the interconnection module allows to move at a semi-independent angle (320°) from one to another using the intersection points of the two operator arms located in the horizontal axis.

重量 Weight	1.0KG
材料 Material	压铸铝合金 Die-cast Aluminum Alloy
角度 Angle	旋转320° Rotated 320°

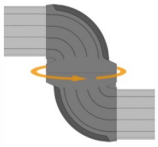

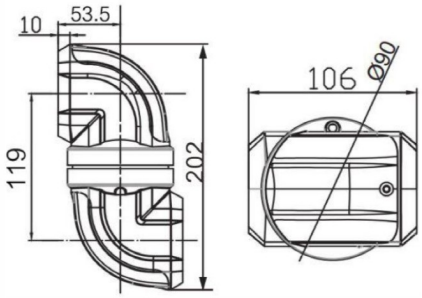

50-65-240 固定底座
Fixe Base

固定底座可以很容易地连接到垂直和水平表面，适用于安装连接。
The Fixe Base can be easily attached to both vertical and horizontal surfaces and is suitable for mounting connections

重量 Weight	0.4KG
材料 Material	压铸铝合金 Die-cast Aluminum Alloy

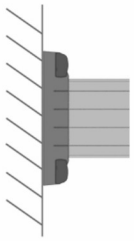

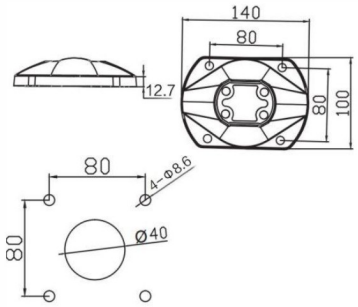

50-65-250 90° 箱体连接器
90° Box connector

90° 箱体连接件设计用于90° 角转弯后立即需要操作面板的组合。绕其轴线旋转角度共320° 。由于该部件具有旋转功能，机器操作员可以通过左右转动面板的方向来为自己做出任何位置。
The 90° rotatable case connector is designed for assemblies that require an operating panel immediately after a 90° Angle turn. The rotation Angle about its axis is 320° . Since the part has a rotating function, the machine operator can make any position for himself by turning the direction of the panel left and right.

重量 Weight	0.8KG
材料 Material	压铸铝合金 Die-cast Aluminum Alloy
角度 Angle	旋转320° Rotated 320°

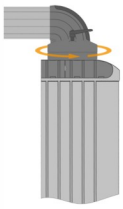

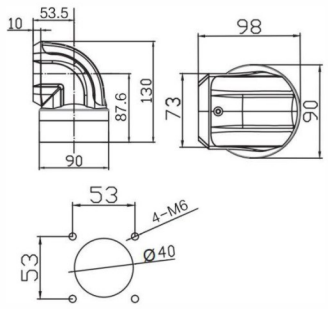

50-65-260 水平墙座
Horzontal Wall Mount

水平墙座设计用于不可能连接到地板的情况，以及希望在墙壁或机器上有高连接点的情况。它允许支撑臂水平放置。
Horizontal wall mounts are designed for situations where a connection to the floor is not possible and where a high connection point is desired on the wall or machine. It allows the support arm to be placed horizontally.

重量 Weight	1.3KG
材料 Material	压铸铝合金 Die-cast Aluminum Alloy
角度 Angle	旋转320° Rotated 320°

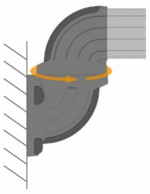

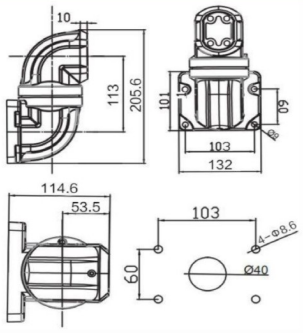

50-65-270 垂直墙座
Vertical wall mounts

垂直墙座设计用于不可能与地面连接，并且希望连接点在墙壁或机器上的情况。它允许支撑臂垂直放置。
Vertical wall mounts are designed for situations where a connection to the ground is not possible and the point of connection is desired on a wall or machine. It allows the support arm to be placed vertically.

重量 Weight	1.2KG
材料 Material	压铸铝合金 Die-cast Aluminum Alloy
角度 Angle	旋转320° Rotated 320°

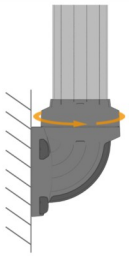

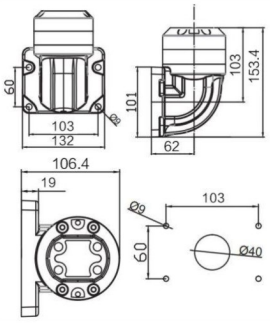

50-65-280 底座
Base

底座可以很容易地连接到垂直和水平表面，可旋转320° ，适用于安装连接。
The base can be easily attached to both vertical and horizontal surfaces and can be rotated 320° for mounting connections.

重量 Weight	0.9KG
材料 Material	压铸铝合金 Die-cast Aluminum Alloy
角度 Angle	旋转320° Rotated 320°

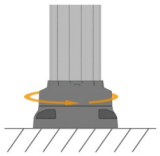

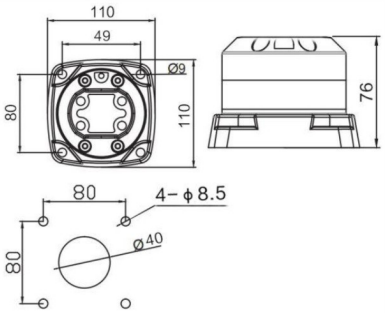

50-65-290 旋转转角
Rotation Angle

旋转转角是一种将水平型材与垂直型材相结合的转角模块，具有固定结构。
Rotation Angle is a kind of Angle module which combines horizontal and vertical profiles and has a fixed structure.

重量 Weight	0.9KG
材料 Material	压铸铝合金 Die-cast Aluminum Alloy
角度 Angle	旋转320° Rotated 320°

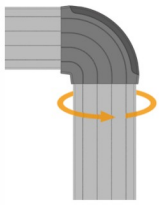

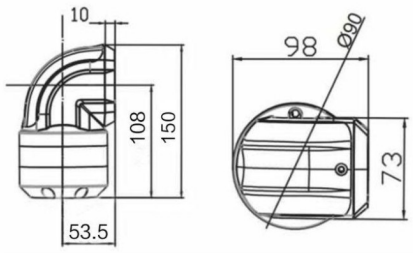

50-65-2090 箱体连接器
box connector

箱体连接件主要用于操作臂与操作面板之间的连接。可旋转320° 。机器操作员可以通过将面板的方向向左或向右旋转来调整位置。
The box connector is mainly used for the connection between the operating arm and the operating panel. Can rotate 320° . The machine operator can adjust the position by rotating the orientation of the panel to the left or right.

重量 Weight	0.6KG
材料 Material	压铸铝合金 Die-cast Aluminum Alloy
角度 Angle	旋转320° Rotated 320°

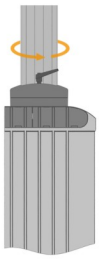

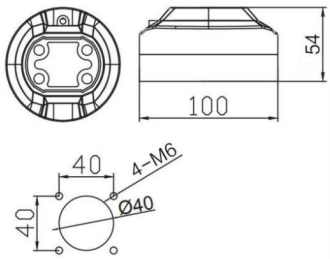

50-65-2091窄边箱体连接器
Narrow side box connector

窄边箱体连接件主要用于操作臂与操作面板之间的连接。可旋转320° 。它主要为窄边框的箱体连接使用。
The narrow side box connector is mainly used for the connection between the operating arm and the operating panel. Can rotate 320° . It is mainly used for the connection of narrow frame boxes.

重量 Weight	0.5KG
材料 Material	压铸铝合金 Die-cast Aluminum Alloy
角度 Angle	旋转320° Rotated 320°

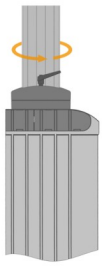

50-65-4900 可旋转箱底座
Rotatable Box Base

可旋转箱底座是为不需要操作臂的系统设计的，可旋转320°，从模块底面的连接点(地面、机器结构等)出发，将产品固定在一个平面区域上。操作面板位于顶部表面。
The rotatable bottom seat is designed for systems that do not require an operating arm and can be rotated 320° to secure the product to a flat area from a connection point on the underside of the module (ground, machine structure, etc.). The operating panel is located on the top surface.

重量 Weight	0.8KG
材料 Material	压铸铝合金 Die-cast Aluminum Alloy
角度 Angle	旋转320° Rotated 320°

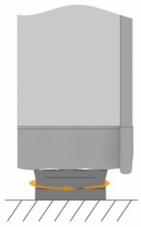

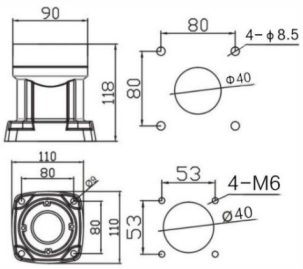

75110-5065转换接头
adapter

转接连接器主要用于不同管径的连接管拼装使用。
The adapter is mainly used for assembling the connecting pipe of different pipe diameters.

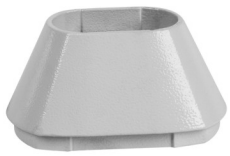

重量 Weight	0.4KG
材料 Material	压铸铝合金 Die-cast Aluminum Alloy

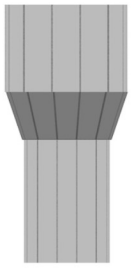

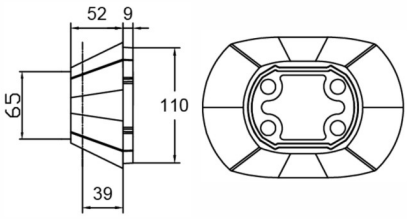

75110-6095转换接头
adapter

转接连接器主要用于不同管径的连接管拼装使用。
The adapter is mainly used for assembling the connecting pipe of different pipe diameters.

重量 Weight	0.5KG
材料 Material	压铸铝合金 Die-cast Aluminum Alloy

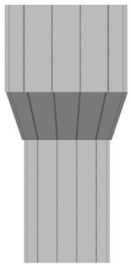

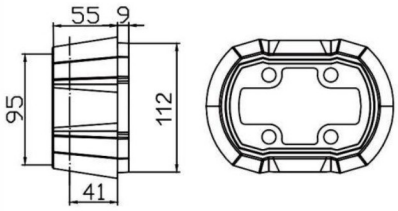

6095-5065转换接头
adapter

转接连接器主要用于不同管径的连接管拼装使用。
The adapter is mainly used for assembling the connecting pipe of different pipe diameters.

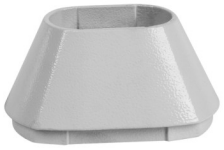

重量 Weight	0.3KG
材料 Material	压铸铝合金 Die-cast Aluminum Alloy

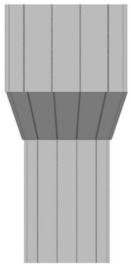

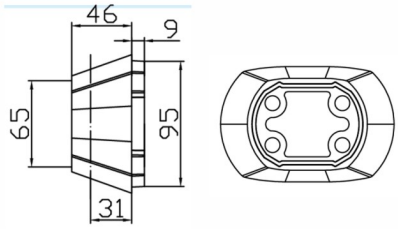

60-95 连接管
60-95 Pipe

连接管主要用于各部件的链接，宽大的内空空间可以放置电缆和控制线材，具有密封性和高承载力。
The connecting pipe is mainly used for the link of various parts, and the wide inner space can be used to place cables and control wires, with sealing and high bearing capacity.

重量 Weight	3.2KG/1000MM
材料 Material	压铸铝合金 Die-cast Aluminum Alloy

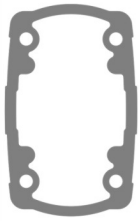

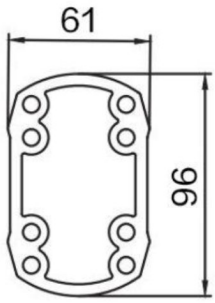

60-95-310 90° 转角
90° Angle

90° 转角联轴器是一种将水平型材与垂直型材相结合的转角模块，具有固定结构。
90° Angle Coupling is a corner turn module which combines horizontal profiles with vertical profiles and has a fixed structure.

重量 Weight	0.7KG
材料 Material	压铸铝合金 Die-cast Aluminum Alloy

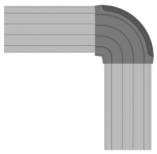

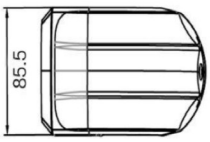

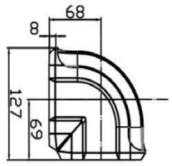

60-95-320 顶座
Top seat

顶座设计用于高连接点(机器顶部等)，该模块允许支撑臂水平放置，可以从左到右旋转320° 。
Top seat Designed for high connection points (top of the machine, etc.), the module allows the support arm to be placed horizontally and can be rotated 320° from left to right。

重量 Weight	1.8KG
材料 Material	压铸铝合金 Die-cast Aluminum Alloy
角度 Angle	旋转320° Rotated 320°

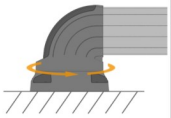

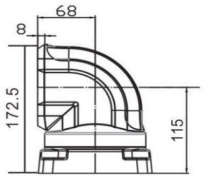

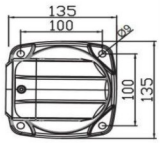

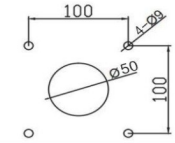

60-95-330 中间铰链
Intermediate hinge

中间铰链，互连结构允许以半独立的角度(320°)从一个移动到另一个使用位于水平轴上的两个操作臂的交点。
Intermediate hinge, the interconnection module allows to move at a semi-independent angle (320°) from one to another using the intersection points of the two operator arms located in the horizontal axis.

重量 Weight	2.2KG
材料 Material	压铸铝合金 Die-cast Aluminum Alloy
角度 Angle	旋转320° Rotated 320°

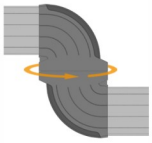

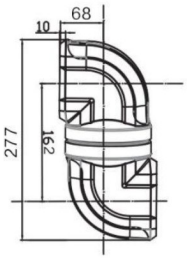

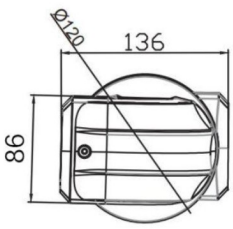

60-95-340固定底座
Fixe Base

固定底座可以很容易地连接到垂直和水平表面，适用于安装连接。
The Fixe Base can be easily attached to both vertical and horizontal surfaces and is suitable for mounting connections

重量 Weight	0.6KG
材料 Material	压铸铝合金 Die-cast Aluminum Alloy

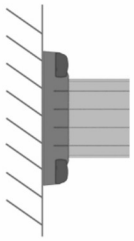

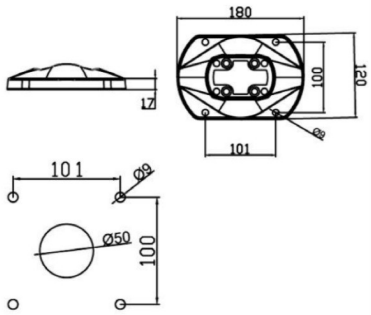

60-95-350 90° 箱体连接器
90° Box connector

90° 箱体连接件设计用于90° 角转弯后立即需要操作面板的组合。绕其轴线旋转角度共320° 。由于该部件具有旋转功能，机器操作员可以通过左右转动面板的方向来为自己做出任何位置。
The 90° rotatable case connector is designed for assemblies that require an operating panel immediately after a 90° Angle turn. The rotation Angle about its axis is 320° . Since the part has a rotating function, the machine operator can make any position for himself by turning the direction of the panel left and right.

重量 Weight	1.5KG
材料 Material	压铸铝合金 Die-cast Aluminum Alloy
角度 Angle	旋转320° Rotated 320°

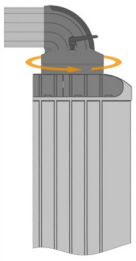

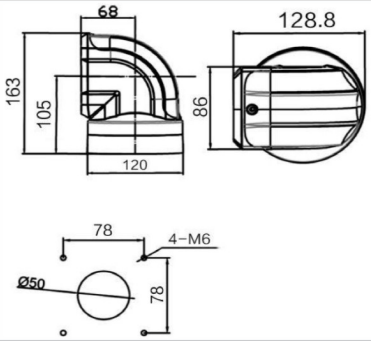

60-95-360 水平墙座
Horzontal Wall Mount

水平墙座设计用于不可能连接到地板的情况，以及希望在墙壁或机器上有高连接点的情况。它允许支撑臂水平放置。
Horizontal wall mounts are designed for situations where a connection to the floor is not possible and where a high connection point is desired on the wall or machine. It allows the support arm to be placed horizontally.

重量 Weight	2.9KG
材料 Material	压铸铝合金 Die-cast Aluminum Alloy
角度 Angle	旋转320° Rotated 320°

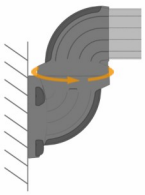

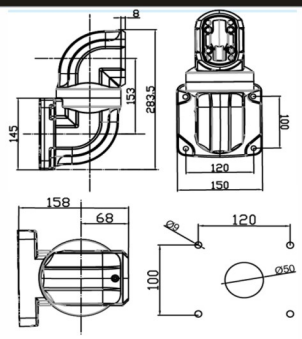

60-95-370 垂直墙座
Vertical wall mounts

垂直墙座设计用于不可能与地面连接，并且希望连接点在墙壁或机器上的情况。它允许支撑臂垂直放置。
Vertical wall mounts are designed for situations where a connection to the ground is not possible and the point of connection is desired on a wall or machine. It allows the support arm to be placed vertically.

重量 Weight	2.7KG
材料 Material	压铸铝合金 Die-cast Aluminum Alloy
角度 Angle	旋转320° Rotated 320°

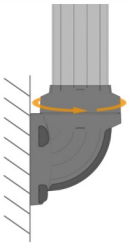

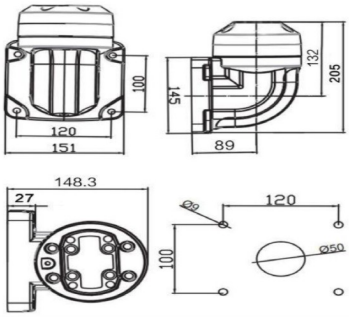

60-95-380 底座
Base

底座可以很容易地连接到垂直和水平表面，可旋转320°，适用于安装连接。
The base can be easily attached to both vertical and horizontal surfaces and can be rotated 320° for mounting connections.

重量 Weight	1.6KG
材料 Material	压铸铝合金 Die-cast Aluminum Alloy
角度 Angle	旋转320° Rotated 320°

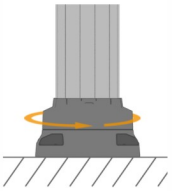

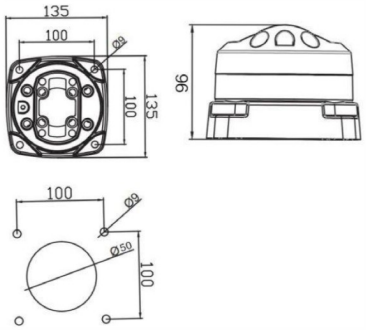

60-95-390 旋转转角
Rotation Angle

旋转转角是一种将水平型材与垂直型材相结合的转角模块，具有固定结构。
Rotation Angle is a kind of Angle module which combines horizontal and vertical profiles and has a fixed structure.

重量 Weight	1.9KG
材料 Material	压铸铝合金 Die-cast Aluminum Alloy
角度 Angle	旋转320° Rotated 320°

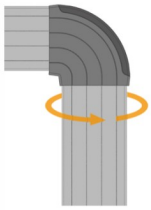

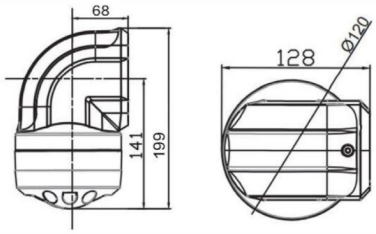

60-95-3090 箱体连接器
box connector

箱体连接件主要用于操作臂与操作面板之间的连接。可旋转320°。机器操作员可以通过将面板的方向向左或向右旋转来调整位置。
The box connector is mainly used for the connection between the operating arm and the operating panel. Can rotate 320°. The machine operator can adjust the position by rotating the orientation of the panel to the left or right.

重量 Weight	0.9KG
材料 Material	压铸铝合金 Die-cast Aluminum Alloy
角度 Angle	旋转320° Rotated 320°

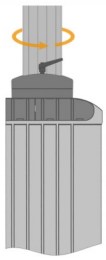

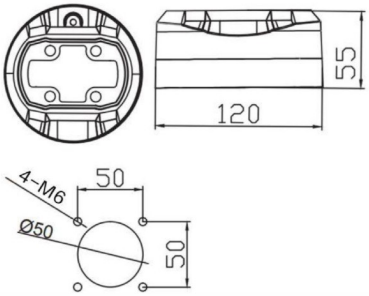

60-95-3091窄边箱体连接器
Narrow side box connector

窄边箱体连接件主要用于操作臂与操作面板之间的连接。可旋转320°。它主要为窄边框的箱体连接使用。
The narrow side box connector is mainly used for the connection between the operating arm and the operating panel. Can rotate 320°. It is mainly used for the connection of narrow frame boxes.

重量 Weight	1.0KG
材料 Material	压铸铝合金 Die-cast Aluminum Alloy
角度 Angle	旋转320° Rotated 320°

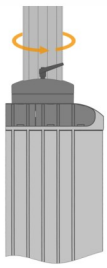

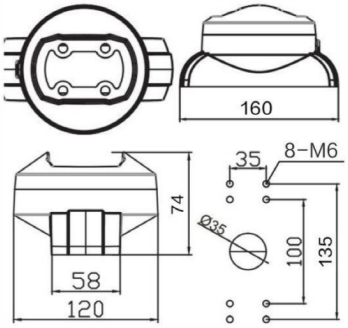

75-110 连接管
60-95 Pipe

连接管主要用于各部件的链接，宽大的内空空间可以放置电缆和控制线材，具有密封性和高承载力。
The connecting pipe is mainly used for the link of various parts, and the wide inner space can be used to place cables and control wires, with sealing and high bearing capacity.

重量 Weight	6.2KG/1000MM
材料 Material	压铸铝合金 Die-cast Aluminum Alloy

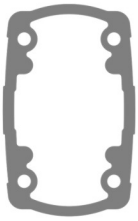

75-110-510 90° 转角
90° Angle

90° 转角联轴器是一种将水平型材与垂直型材相结合的转角模块，具有固定结构。
90° Angle Coupling is a corner turn module which combines horizontal profiles with vertical profiles and has a fixed structure.

重量 Weight	1.1KG
材料 Material	压铸铝合金 Die-cast Aluminum Alloy

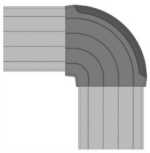

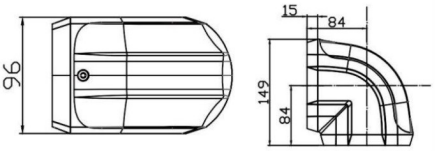

75-110-520 顶座
Top seat

顶座设计用于高连接点(机器顶部等)，该模块允许支撑臂水平放置，可以从左到右旋转320° 。
Top seat Designed for high connection points (top of the machine, etc.), the module allows the support arm to be placed horizontally and can be rotated 320° from left to right。

重量 Weight	4.8KG
材料 Material	压铸铝合金 Die-cast Aluminum Alloy
角度 Angle	旋转320° Rotated 320°

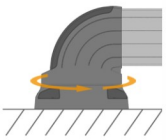

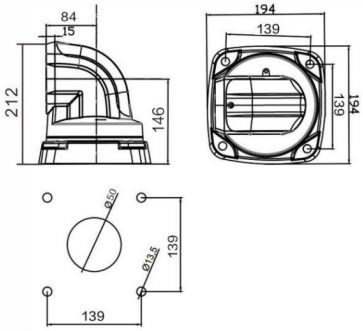

75-110-530 中间铰链
Intermediate hinge

中间铰链，互连结构允许以半独立的角度(320°)从一个移动到另一个使用位于水平轴上的两个操作臂的交点。
Intermediate hinge, the interconnection module allows to move at a semi-independent angle (320°) from one to another using the intersection points of the two operator arms located in the horizontal axis.

重量 Weight	4.5KG
材料 Material	压铸铝合金 Die-cast Aluminum Alloy
角度 Angle	旋转320° Rotated 320°

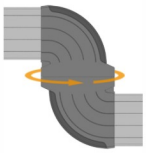

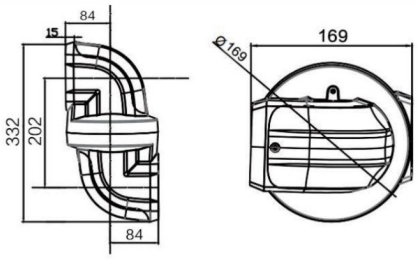

75-110-540固定底座
Fixe Base

固定底座可以很容易地连接到垂直和水平表面，适用于安装连接。
The Fixe Base can be easily attached to both vertical and horizontal surfaces and is suitable for mounting connections

重量 Weight	0.9KG
材料 Material	压铸铝合金 Die-cast Aluminum Alloy

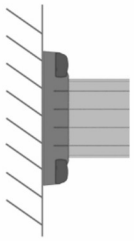

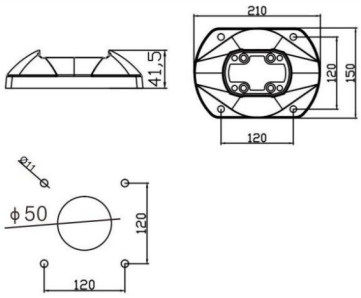

75-110-550 90° 箱体连接器
90° Box connector

90° 箱体连接件设计用于90° 角转弯后立即需要操作面板的组合。绕其轴线旋转角度共320° 。由于该部件具有旋转功能，机器操作员可以通过左右转动面板的方向来为自己做出任何位置。
The 90° box connector is designed for assemblies that require an operating panel immediately after a 90° Angle turn. The rotation Angle about its axis is 320° . Since the part has a rotating function, the machine operator can make any position for himself by turning the direction of the panel left and right.

重量 Weight	1.8KG
材料 Material	压铸铝合金 Die-cast Aluminum Alloy
角度 Angle	旋转320° Rotated 320°

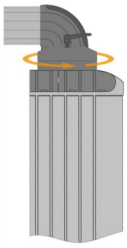

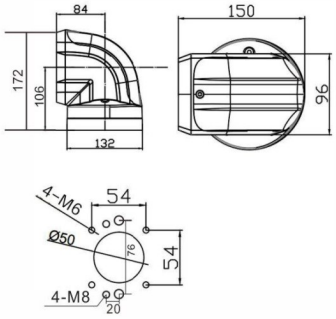

75-110-560 水平墙座
Horzontal Wall Mount

水平墙座设计用于不可能连接到地板的情况，以及希望在墙壁或机器上有高连接点的情况。它允许支撑臂水平放置。
The 90° rotatable case connector is designed for assemblies that require an operating panel immediately after a 90° Angle turn. The rotation Angle about its axis is 320° . Since the part has a rotating function, the machine operator can make any position for himself by turning the direction of the panel left and right.

重量 Weight	5.4KG
材料 Material	压铸铝合金 Die-cast Aluminum Alloy
角度 Angle	旋转320° Rotated 320°

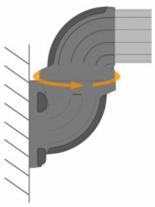

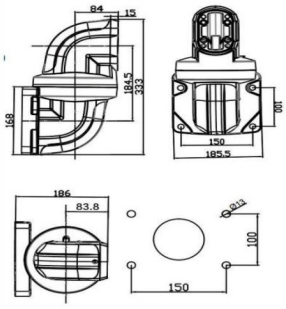

75-110-570 垂直墙座
Vertical wall mounts

垂直墙座设计用于不可能与地面连接，并且希望连接点在墙壁或机器上的情况。它允许支撑臂垂直放置。
Horizontal wall mounts are designed for situations where a connection to the floor is not possible and where a high connection point is desired on the wall or machine. It allows the support arm to be placed horizontally.

重量 Weight	5.1KG
材料 Material	压铸铝合金 Die-cast Aluminum Alloy
角度 Angle	旋转320° Rotated 320°

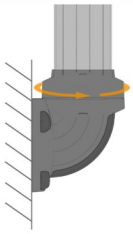

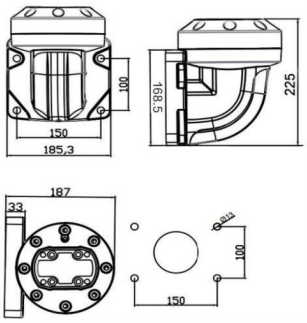

75-110-580 底座
Base

底座可以很容易地连接到垂直和水平表面，可旋转320° ，适用于安装连接。
The base can be easily attached to both vertical and horizontal surfaces and can be rotated 320° for mounting connections.

重量 Weight	4.4KG
材料 Material	压铸铝合金 Die-cast Aluminum Alloy
角度 Angle	旋转320° Rotated 320°

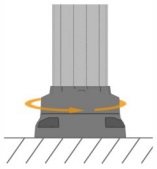

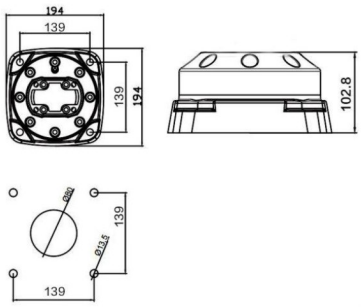

75-110-590 旋转转角
Rotation Angle

旋转转角是一种将水平型材与垂直型材相结合的转角模块，具有固定结构。
Rotation Angle is a kind of Angle module which combines horizontal and vertical profiles and has a fixed structure.

重量 Weight	4.3KG
材料 Material	压铸铝合金 Die-cast Aluminum Alloy
角度 Angle	旋转320° Rotated 320°

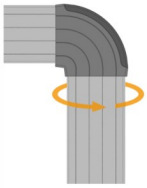

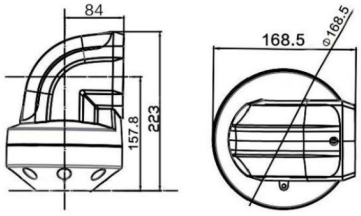

75-110-5090 箱体连接器
box connector

箱体连接件主要用于操作臂与操作面板之间的连接。可旋转320° 。机器操作员可以通过将面板的方向向左或向右旋转来调整位置。
The box connector is mainly used for the connection between the operating arm and the operating panel. Can rotate 320° . The machine operator can adjust the position by rotating the orientation of the panel to the left or right.

重量 Weight	1.0KG
材料 Material	压铸铝合金 Die-cast Aluminum Alloy
角度 Angle	旋转320° Rotated 320°

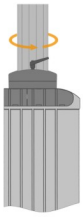

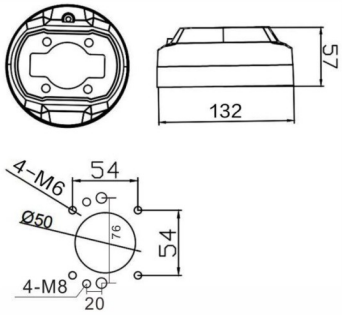

A 01

A 05

A 02

A 06

A 03

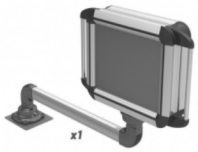

A 07

A 04

A 08

E 01

E 05

E 02

E 06

E 03

E 07

E 04

E 08

D 01

D 06

D 02

D 07

D 03

D 08

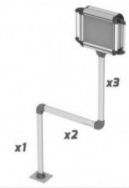

D 04

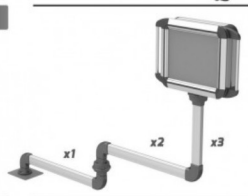

D 09

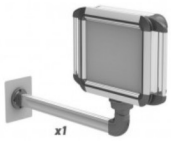

D 05

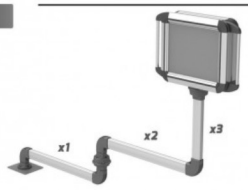

D 10

G 01

G 05

G 02

G 06

G 03

G 07

G 04

惠州市金鼎丰自动化科技有限公司

Huizhou Jindingfeng automation Technology Co., LTD

地址/Address：惠州市惠城区马安镇上寮荣星6号
Huizhou City, Ma 'an Town, Liurongxing No. 6

电话/Tel：0752-2168551

联系人/Contact：蓝先生 手机/Mobile：+86 13823512056
陈先生 手机/Mobile：+86 18244974330

网站/Web：www.jdf-fa.com

邮箱/Email：jdfcaster@163.com jdf@jdf-fa.com